WESTLAKE

Project: _____

Model: _____ Series #: _____

Dealer: _____ Quantity#: _____

Delivery address: _____ Date: _____

2 Door Commercial Grade Under Counter Refrigerator

Model#KTR-60B1



Features

- Precision ventilated refrigertion system keeps food fresh
- Eletronic control system make it easy to adjust temperature set ponit and defrost frequency
- Self closing door with 90 degree stay open feature, locks and keys included
- Preinstalled heavy duty casters with brakes
- Removeable installation board makes it easy to access condenser coil for cleaning
- Stainless steel exterior and interior, guaranteed to last up to 10 years and beyond
- Paired with a durable copper coil evaporator, Westlake products are ensure surpassing 10 years of reliable performance
- 2 epoxy coated steel wire shelves,90 lbs loading capacity each
- R290 hydor carbon refrigerant that has zero(0) ozone depletion potential(ODP)&three(3)global warming potential(GWP)

WARRANTY:

- 2 Years Parts and Labor
- 6 Years compressor (Additional 4 years parts only)
- westlake is responsible for components failure. but is not responsible for improper operation failure and artificial damage.

2 year WARRANTY
Parts & Labor

6 year WARRANTY
Compressor

Intertek Intertek

Conforms to UL&NSF-7 Standards









WESTLAKE

2 Door Commercial Grade Under Counter Refrigerator

Model#KTR-60B1

TECHNICAL DATA

SKU	WKTR-60B
Model	KTR-60B1
Temperature range	33°F~41°F
Refigerant	R290
Deforosting	Auto Defrost
Power	215W
Exterior Dimension(WxDxH) inch	60.2*29.9*34.2
Interior Dimension(WxDxH) inch	55.9*19.9*24.8
Gross Weight(lb)	287
Net Weight(lb)	260
Packing Dimension(WxDxH) inch	62.4*31.1*38.4
Voltage/Phase/Hz	115V/1/60Hz
Amps	1.5A
Electrical Cord Length	98.4 inches

PLAN VIEW

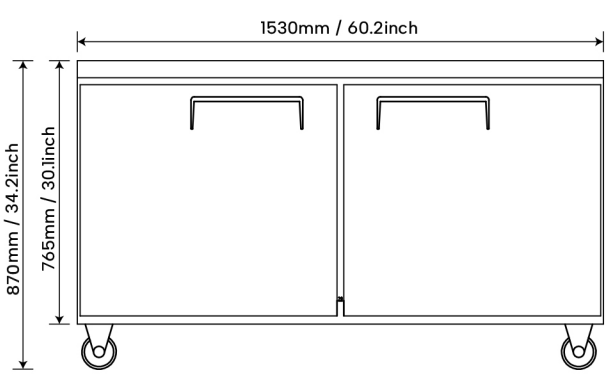

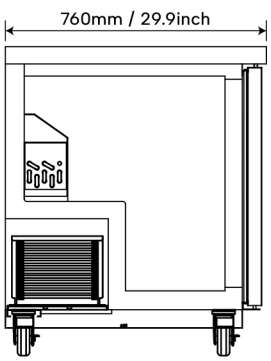

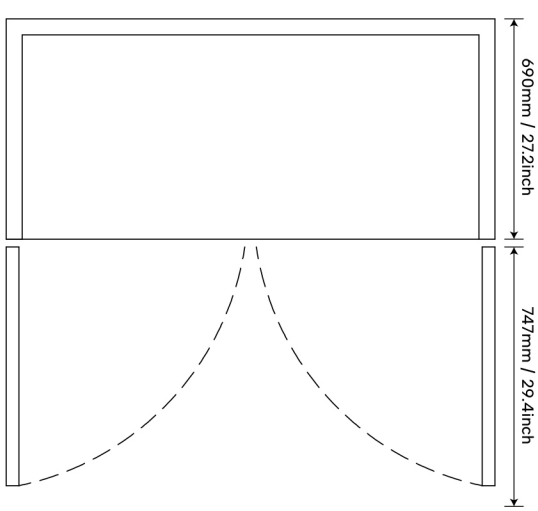

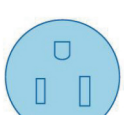

NEMA 5-15P